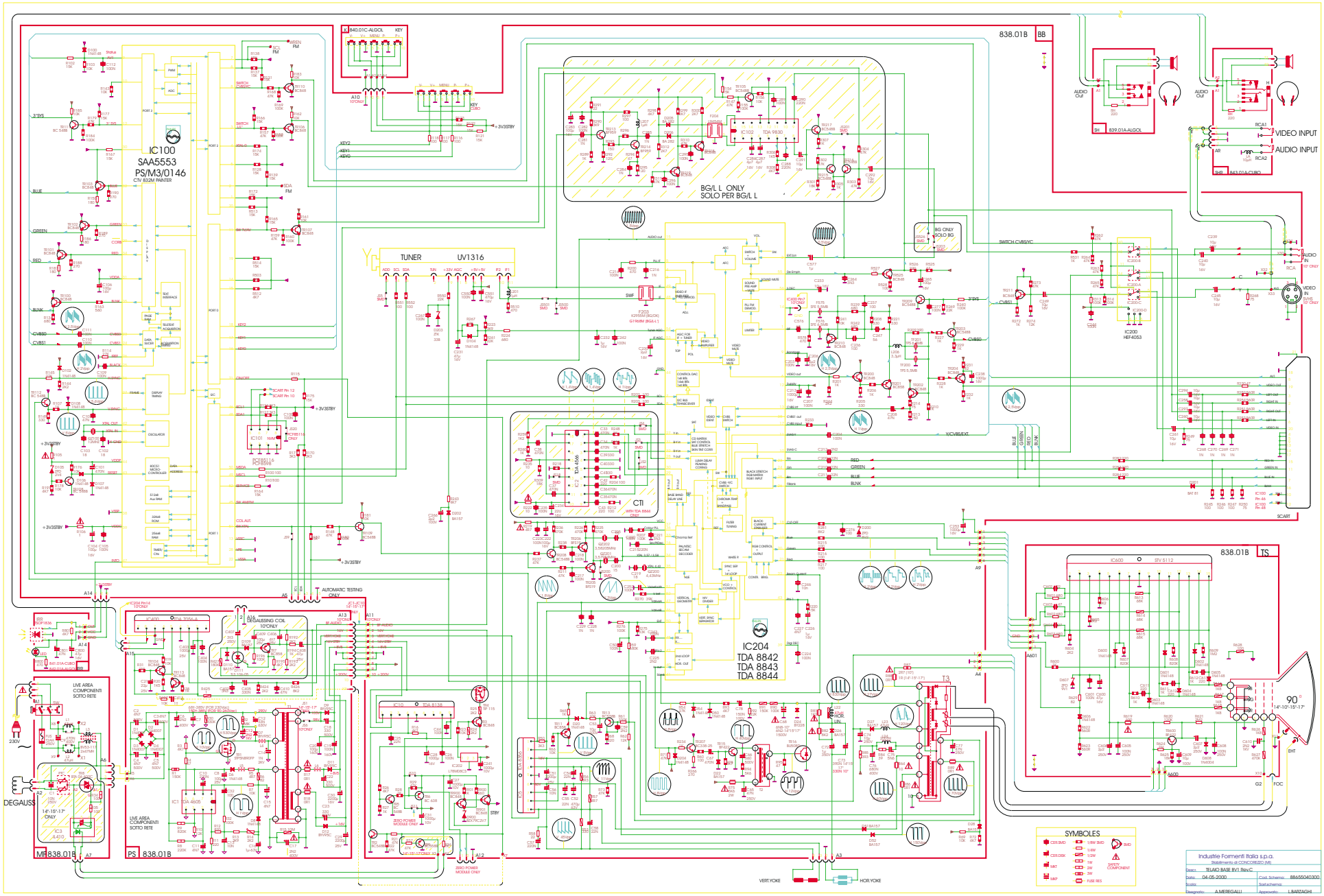
IC100
SAA5553
PS/M3/0146
CTV 832M PAINTER
TUNER
UV1316
IC204
TDA 8842
TDA 8843
TDA 8844
BG/L L ONLY
SOLO PER BG/ L L
838.01B
BB
TS
MR 838.01B
PS 838.01B
AUDIO Out
VIDEO INPUT
AUDIO INPUT
SCART
DEGAUSS
AUTOMATIC TESTING ONLY
LIVE AREA COMPONENTI SOTTO RETE
SYMBOLES
Industrie Formenti Italia s.p.a.
Stabilimento di CONCOREZZO (MB)
Disegno: TELAIO BASE BV1 Rev.C
Data: 04-05-2000
Cod. Schema: 8865504030
Disegnato: A.MERREGALLI
Approvato: L.BARZAGHI

838.01B
BV1 838.01B
838.01B

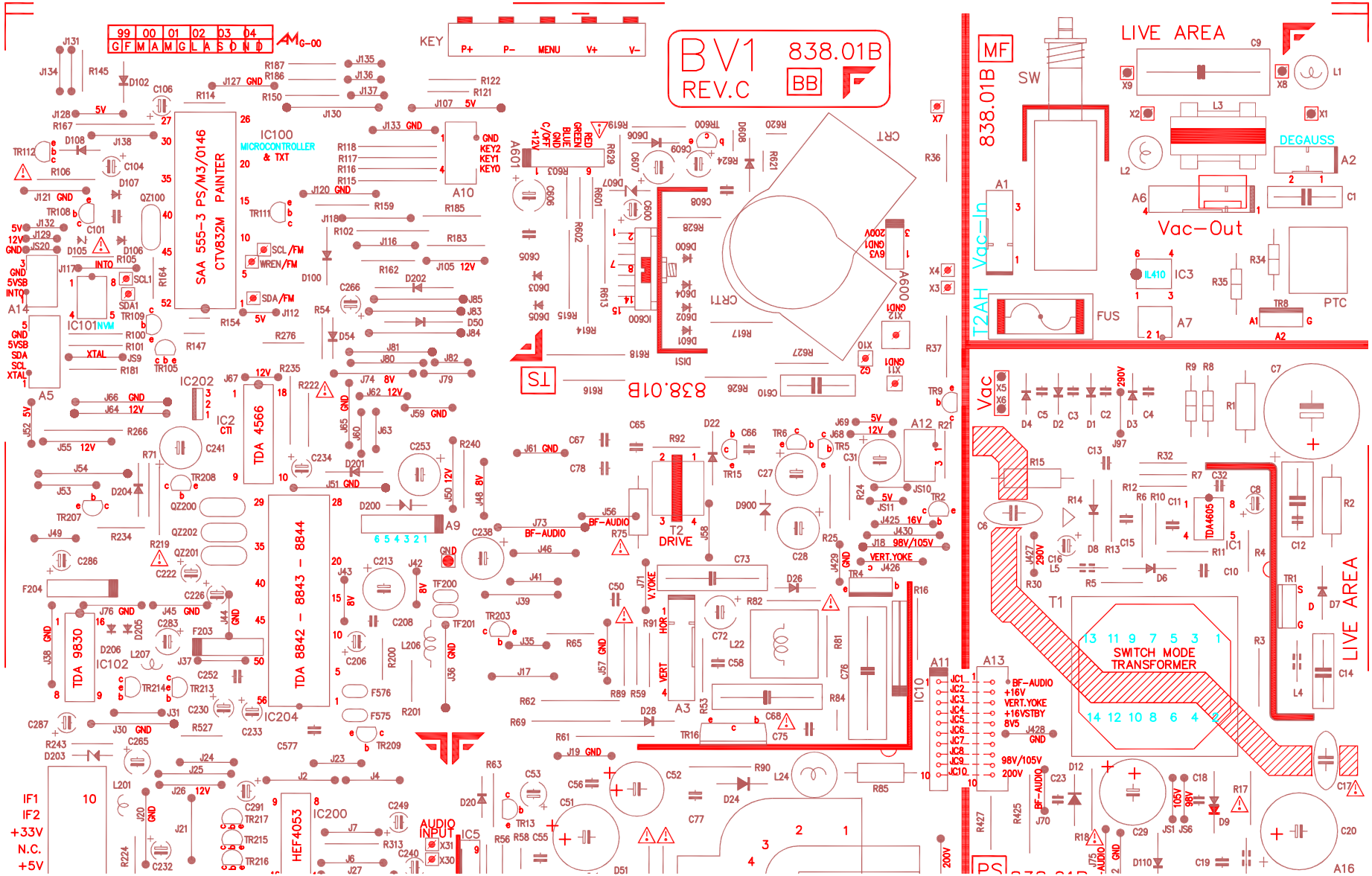
BV1
REV.C
838.01B
BB
MF
838.01B
LIVE AREA
SW
DEGAUSS
Vac-In
Vac-Out
T2AH
FUS
IC3
PTC
A7
A2
A1
A6
L1
L2
L3
C9
X9
X8
X2
X1
C1
R34
R35
TR8
A16
LIVE AREA
Vac
X5
X6
R9
R8
C7
D4
C5
D2
C3
D1
C2
D3
C4
J97
R1
R15
C13
R32
R7
C32
C8
R12
R6
R10
C11
TDA4605
IC1
R2
C6
R14
C12
C16
L5
D8
R13
C15
R11
R4
R30
R5
D6
C10
TR1
D7
T1
SWITCH MODE
TRANSFORMER
13 11 9 7 5 3 1
14 12 10 8 6 4 2
R3
C14
L4
C17
C20
R17
C18
D9
C19
D110
C29
R18
C23
D12
R427
R425
J70
J75
J56
J51
J52
J53
J54
J55
J59
J61
J62
J63
J64
J65
J66
J67
J69
J73
J74
J76
J79
J80
J81
J82
J85
J83
J84
J86
J87
J88
J89
J90
J91
J92
J93
J94
J95
J96
J97
J98
J99
J100
J101
J102
J103
J104
J105
J106
J107
J108
J109
J110
J111
J112
J113
J114
J115
J116
J117
J118
J119
J120
J121
J122
J123
J124
J125

PS
LIVE AREA
T1 SWITCH MODE
DEGAUSS
TS
BB
KEY
P+
P-
MENU
V+
V-
ME
LIVE AREA
Vac-Out
Vac-In
FUS
T2AH
PTC
DEGAUSS

BV1 838.01B
838.01B
LIVE AREA
SWITCH MODE
DEGAUSS
Vpc OUT
Vpc

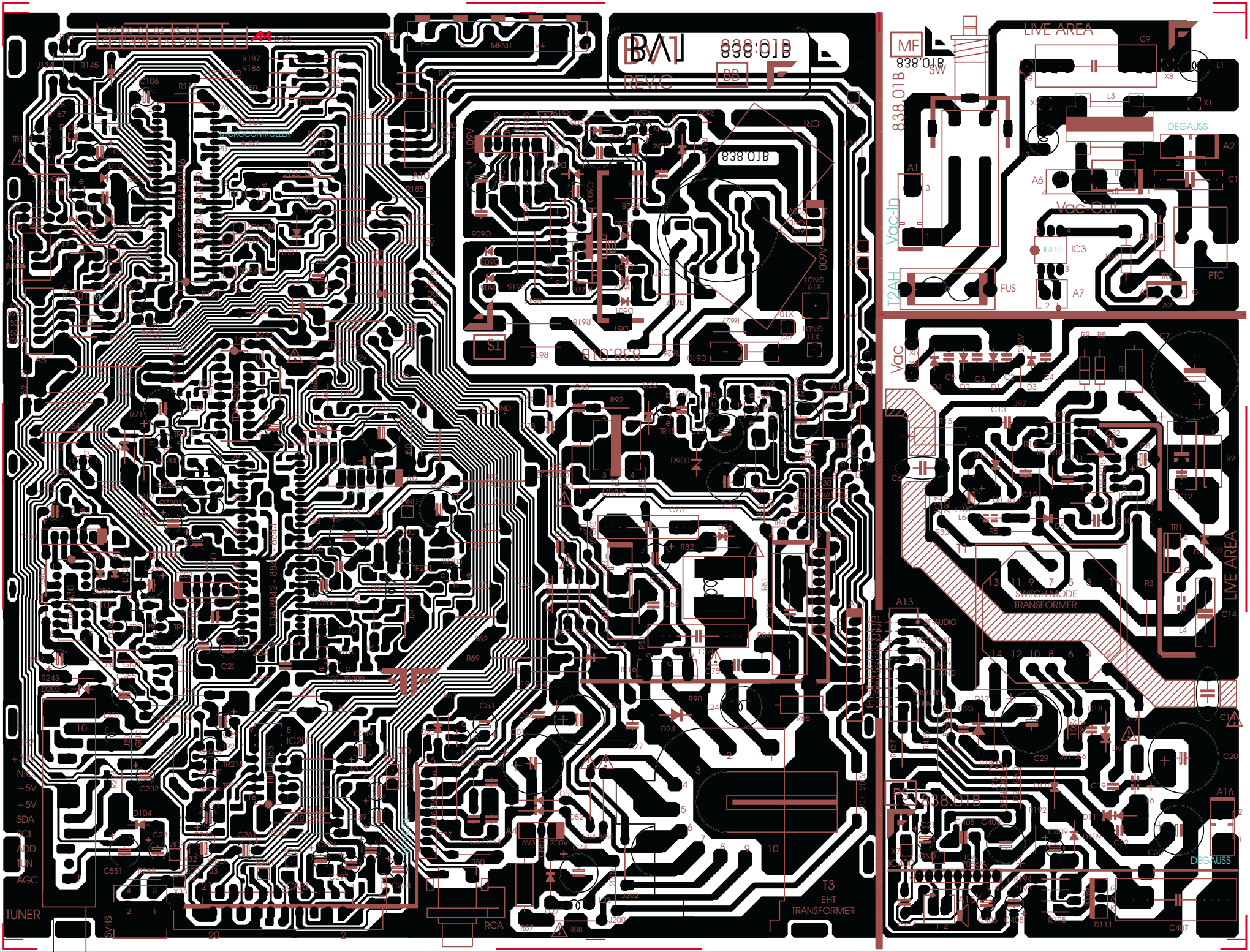
838.01B
REV.C
BB
MF
SW
LIVE AREA
DEGAUSS
Vac-In
Vac Out
T2AH
FUS
IC3
PTC
Vac
SWITCH MODE
TRANSFORMER
T3
EHT
TRANSFORMER
TUNER
RCA
MICROCONTROLLER
+5V
SDA
SCL
AGC